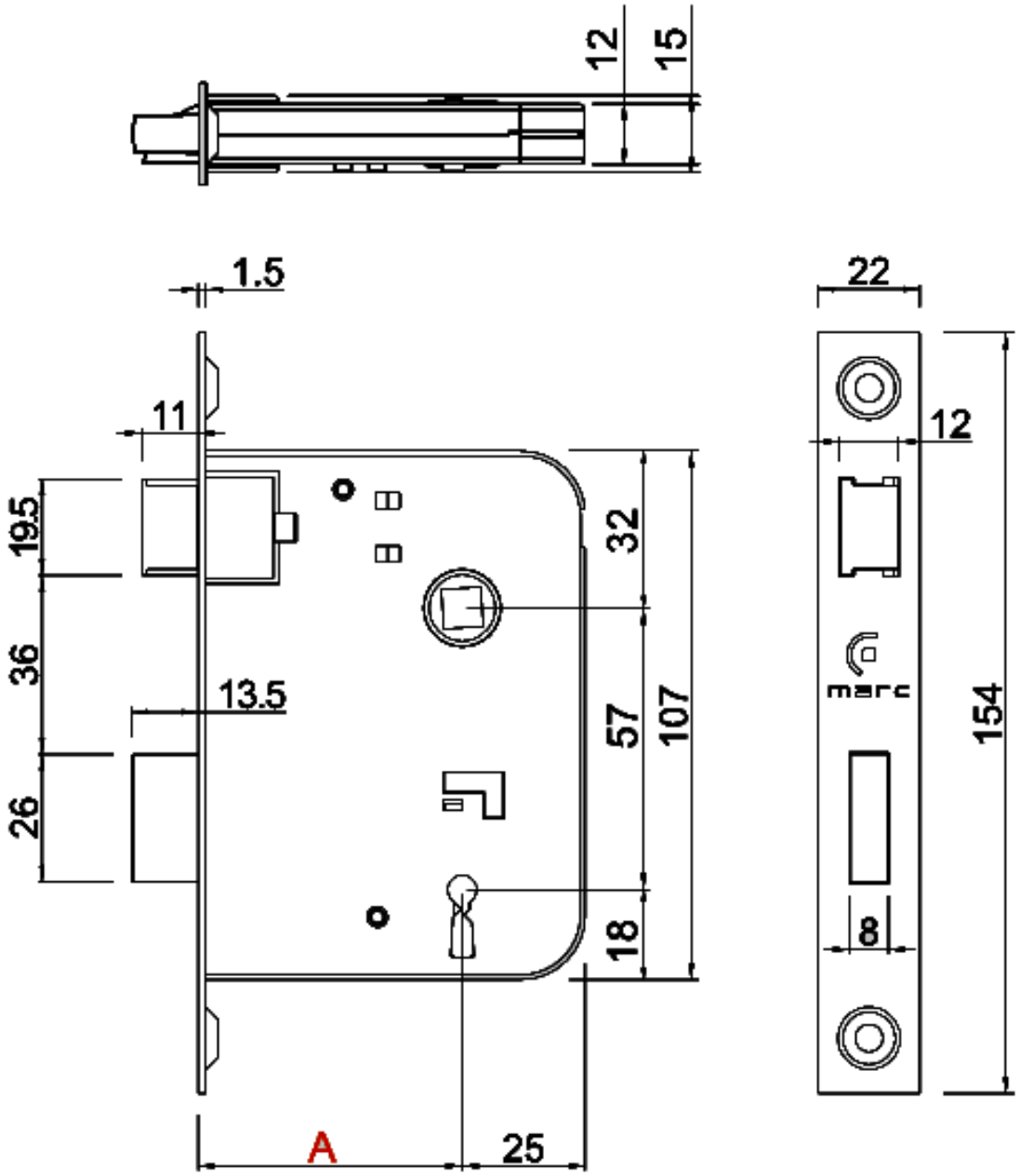
12
15
1.5
22
11
12
19.5
32
36
13.5
57
107
154
26
8
18
A
25